1. ALL RESISTANCE VALUES ARE IN OHMS, 0.1 WATT +/- 5%.
2. ALL CAPACITANCE VALUES ARE IN MICROFARADS.
3. ALL CRYSTALS & OSCILLATOR VALUES ARE IN HERTZ.

REV	ECN	DESCRIPTION OF REVISION	CK APPD / DATE
1	0018057351	ENGINEERING RELEASED	2019-06-04

X1777 KEYBOARD DAUGHTER BOARD
PROTO 1 (FOR MLB PROTO 4)

LAST_MODIFICATION=Tue Jun 4 16:27:01 2019

PAGE	CSA	CONTENTS	SYNC	DATE
1	<CSA_PAGE1>	TABLE OF CONTENTS	<SYNC_MASTER1>	<SYNC_DATE1>
2	<CSA_PAGE2>	IOXP/RSLOC/EEPROM	<SYNC_MASTER2>	<SYNC_DATE2>
3	<CSA_PAGE3>	CONNECTORS & ESD DIODES	<SYNC_MASTER3>	<SYNC_DATE3>
4	<CSA_PAGE4>	CONSTRAINS & BOM VARIANTS	<SYNC_MASTER4>	<SYNC_DATE4>
5	<CSA_PAGE5>	HISTORY	<SYNC_MASTER5>	<SYNC_DATE5>
	<CSA_PAGE6>		<SYNC_MASTER6>	<SYNC_DATE6>
	<CSA_PAGE7>		<SYNC_MASTER7>	<SYNC_DATE7>
	<CSA_PAGE8>		<SYNC_MASTER8>	<SYNC_DATE8>
	<CSA_PAGE9>		<SYNC_MASTER9>	<SYNC_DATE9>
	<CSA_PAGE10>		<SYNC_MASTER10>	<SYNC_DATE10>
	<CSA_PAGE11>		<SYNC_MASTER11>	<SYNC_DATE11>
	<CSA_PAGE12>		<SYNC_MASTER12>	<SYNC_DATE12>
	<CSA_PAGE13>		<SYNC_MASTER13>	<SYNC_DATE13>
	<CSA_PAGE14>		<SYNC_MASTER14>	<SYNC_DATE14>
	<CSA_PAGE15>		<SYNC_MASTER15>	<SYNC_DATE15>

SCHEMATIC: 051-05362
PCBF: 820-02005
PCBA: 639-08868
MCO: 056-09168

TABLE OF CONTENTS

DRAWING TITLE
SCH,KYBD,DAUGHTER,BRD,X1777

KEYBOARD INTERFACE - IO EXPANDER

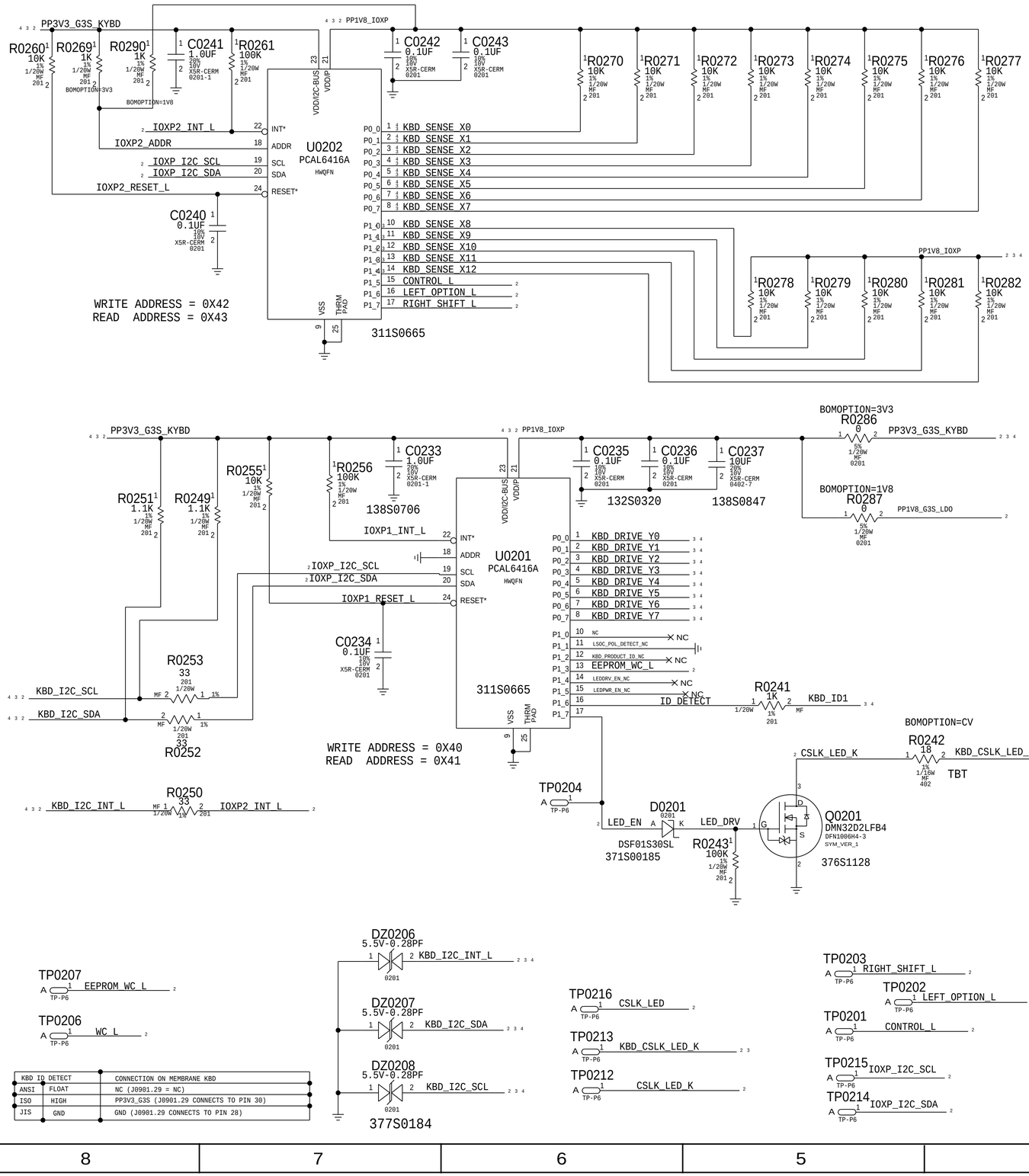

3.3V RSLOC ISOLATION KEYS/SMC RESET

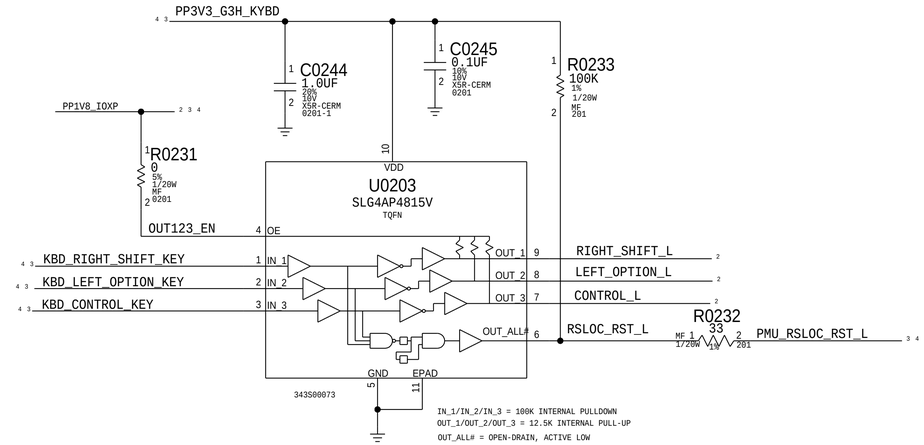

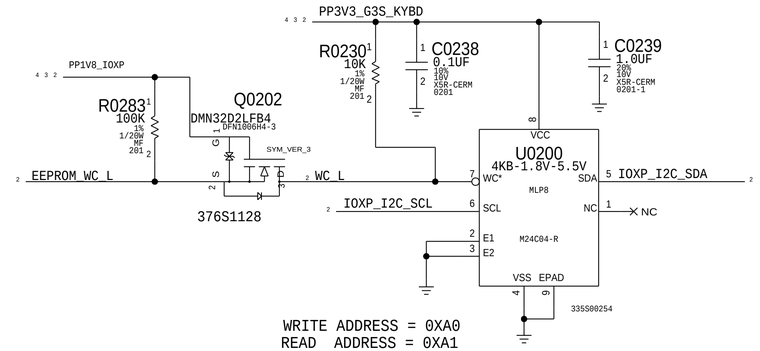

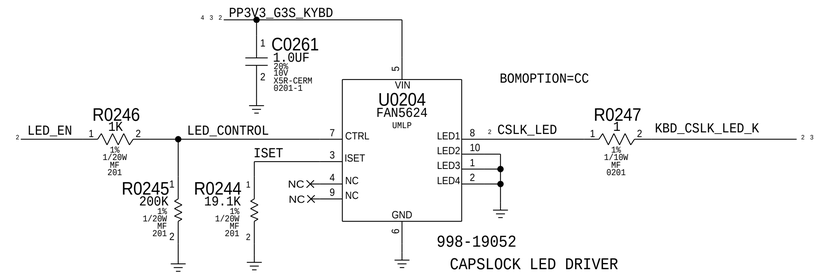

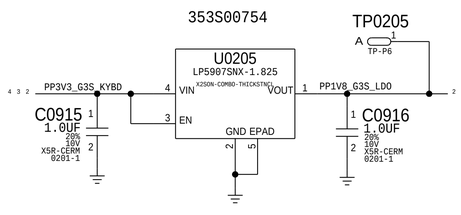

PAGE TITLE

IOXP/RSLOC/EEPROM

MEMBRANE ZIF CONNECTOR

518S0752

CRITICAL

J0901

	32	
PP1V8_IOXP	30	
KBD_ID1	29	
	28	
ID2	27	NC
KBD_DRIVE_Y2	26	
KBD_DRIVE_Y1	25	
KBD_DRIVE_Y3	24	
KBD_DRIVE_Y4	23	
KBD_SENSE_X0	22	
KBD_SENSE_X1	21	
KBD_SENSE_X2	20	
KBD_SENSE_X5	19	
KBD_SENSE_X3	18	
KBD_SENSE_X9	17	
KBD_SENSE_X12	16	
KBD_SENSE_X4	15	
KBD_SENSE_X11	14	
KBD_SENSE_X10	13	
KBD_SENSE_X6	12	
KBD_SENSE_X7	11	
KBD_SENSE_X8	10	
KBD_DRIVE_Y5	9	
KBD_DRIVE_Y7	8	
KBD_DRIVE_Y6	7	
KBD_DRIVE_Y0	6	
KBD_CSLK_LED_K	5	
PP3V3_G3H_KYBD	4	
KBD_RIGHT_SHIFT_KEY	3	
KBD_LEFT_OPTION_KEY	2	
KBD_CONTROL_KEY	1	
	31	

F-RT-SM

FF14A-30C-R11DL-B-3H

MLB-IPD-KBD ZIF CONNECTOR

518S0794

	16	
	14	
PMU_RSLOC_RST_L	13	
PP3V3_G3H_INTPR	12	
	11	NC
KBDLED_CATHODE1	10	
PPVOUT_S0_KBDBKLT	9	
KBDLED_CATHODE2	8	
	7	NC
PP3V3_G3S_INTPR	6	
	5	
KBD_I2C_SDA	4	
KBD_I2C_INT_L	3	
KBD_I2C_SCL	2	
	1	
	15	

F-RT-SM

FF14A-14C-R11DL-B-3H

J0902

MIN_LINE_WIDTH=0.3000
MIN_NECK_WIDTH=0.1500

R0902 0 0201

PP3V3_G3S_INTPR — VOLTAGE=3.3V

PP3V3_G3S_KYBD — VOLTAGE=3.3V

MIN_LINE_WIDTH=0.3000
MIN_NECK_WIDTH=0.1500

R0906 0 0201

PP3V3_G3H_INTPR — VOLTAGE=3.3V

PP3V3_G3H_KYBD

MIN_LINE_WIDTH=0.3000
MIN_NECK_WIDTH=0.1500
VOLTAGE=3.3V

LED BACKLIGHT ZIF CONNECTOR

518S0818

J0903

FF14A-6C-R11DL-B-3H

F-RT-SM

	7	
KBDLED_CATHODE1	1	
	2	NC
PPVOUT_S0_KBDBKLT	3	
	4	
	5	NC
KBDLED_CATHODE2	6	
	8	

CRITICAL

ESD DIODES

377S0186

DZ0901 — ESDAVLC6-5BU6 — UDFN

PP3V3_G3H_INTPR	1	6 KBD_CSLK_LED_K
GND	2	5 PMU_RSLOC_RST_L
NC	3	4 PP3V3_G3S_INTPR

DZ0902 — ESDAVLC6-5BU6 — UDFN

KBD_SENSE_X12	1	6 KBD_SENSE_X10
GND	2	5 KBD_SENSE_X9
KBD_SENSE_X11	3	4 KBD_SENSE_X8

DZ0903 — ESDAVLC6-5BU6 — UDFN

KBD_DRIVE_Y7	1	6 KBD_DRIVE_Y0
GND	2	5 KBD_DRIVE_Y1
KBD_DRIVE_Y6	3	4 KBD_DRIVE_Y2

DZ0904 — ESDAVLC6-5BU6 — UDFN

NC	1	6 KBD_DRIVE_Y3
GND	2	5 KBD_DRIVE_Y4
KBD_LEFT_OPTION_KEY	3	4 KBD_DRIVE_Y5

DZ0905 — ESDAVLC6-5BU6 — UDFN

KBD_CONTROL_KEY	1	6 KBD_SENSE_X5
GND	2	5 KBD_SENSE_X6
NC	3	4 KBD_SENSE_X7

DZ0906 — ESDAVLC6-5BU6 — UDFN

KBD_SENSE_X0	1	6 KBD_SENSE_X2
GND	2	5 KBD_SENSE_X3
KBD_SENSE_X1	3	4 KBD_SENSE_X4

DZ0910 — 5.5V-0.28PF — 0201

1 — 2 KBD_RIGHT_SHIFT_KEY

PAGE TITLE

CONNECTORS & ESD DIODES

DEFAULT SPACING & PHYSICAL CONSTRAINTS

BOARD LAYERS	BOARD AREAS	BOARD UNITS (MIL or MM)	ALLEGRO VERSION
TOP,ISL2,IS3L,BOTTOM	NO_TYPE	MM	16.2

PHYSICAL_RULE_SET	LAYER	ALLOW ROUTE ON LAYER?	MINIMUM LINE WIDTH	MINIMUM NECK WIDTH	MAXIMUM NECK LENGTH	DIFFPAIR PRIMARY GAP	DIFFPAIR NECK GAP
DEFAULT	*	Y	0.075 MM	0.07 MM	10 MM	0.075 MM	0.070 MM
STANDARD	*	Y	=DEFAULT	=DEFAULT	=DEFAULT	=DEFAULT	=DEFAULT

BOM VARIANTS

BOM NUMBER	BOM NAME	BOM OPTIONS
639-08868	PCBA,KYBD,DAUGHTER,BRD,X1777	COMMON,ALTERNATE,CC,1V8

BOM TABLE PART SCHEMATIC & BOM

PART#	QTY	DESCRIPTION	REFERENCE DESIGNATOR(S)	CRITICAL	BOM OPTION
051-05362	1	SCH,KYBD,DAUGHTER,BRD,X1777	SCH	CRITICAL	
820-02005	1	PCBF,KYBD,DAUGHTER,BRD,X1777	PCB	CRITICAL	

ALTERNATE

PART NUMBER	ALTERNATE FOR PART NUMBER	BOM OPTION	REF DES	COMMENTS:
138S0786	138S0847	?	ALL	ALT:SAMSUNG
138S0739	138S0706	?	ALL	ALT:SAMSUNG
138S0945	138S0706	?	ALL	ALT:KYOCERA
377S0155	377S0184	?	ALL	ALT:ONSEMI
131S00059	131S0852	?	ALL	ALT:SAMSUNG
353S00879	353S00754	?	ALL	ALT:ONSEMI

KEYS MATRIX TEST POINTS

TP0901 A TP-P6 — KBD_SENSE_X7 (2 3)
TP0902 A TP-P6 — KBD_SENSE_X8 (2 3)
TP0903 A TP-P6 — KBD_SENSE_X9 (2 3)
TP0904 A TP-P6 — KBD_SENSE_X10 (2 3)
TP0905 A TP-P6 — KBD_SENSE_X11 (2 3)
TP0906 A TP-P6 — KBD_SENSE_X12 (2 3)
TP0907 A TP-P6 — GND
TP0908 A TP-P6 — KBD_SENSE_X0 (2 3)
TP0909 A TP-P6 — KBD_SENSE_X1 (2 3)
TP0910 A TP-P6 — KBD_SENSE_X2 (2 3)
TP0911 A TP-P6 — KBD_SENSE_X3 (2 3)
TP0912 A TP-P6 — KBD_SENSE_X4 (2 3)
TP0913 A TP-P6 — KBD_SENSE_X5 (2 3)
TP0914 A TP-P6 — KBD_SENSE_X6 (2 3)
TP0915 A TP-P6 — KBD_DRIVE_Y6 (2 3 4)
TP0916 A TP-P6 — KBD_DRIVE_Y7 (2 3 4)
TP0917 A TP-P6 — KBD_CONTROL_KEY (2 3)
TP0918 A TP-P6
TP0919 A TP-P6 — KBD_LEFT_OPTION_KEY (2 3)
TP0920 A TP-P6 — KBD_RIGHT_SHIFT_KEY (2 3)
TP0921 A TP-P6 — PP3V3_G3H_KYBD (2 3 4)
TP0922 A TP-P6 — KBD_DRIVE_Y0 (2 3 4)
TP0923 A TP-P6 — KBD_DRIVE_Y1 (2 3 4)
TP0924 A TP-P6 — KBD_DRIVE_Y2 (2 3 4)
TP0925 A TP-P6 — KBD_DRIVE_Y3 (2 3 4)
TP0926 A TP-P6 — KBD_DRIVE_Y4 (2 3 4)
TP0927 A TP-P6 — KBD_DRIVE_Y5 (2 3 4)
TP0928 A TP-P6

MLB-IPD-KBD CONN. TEST POINTS

TP0929 A TP-P6 — KBDLED_CATHODE1 (3 4)
TP0930 A TP-P6 — PPVOUT_S0_KBDBKLT (3 4)
TP0931 A TP-P6 — KBDLED_CATHODE2 (3 4)
TP0932 A TP-P6 — KBD_I2C_SDA (2 3)
TP0933 A TP-P6 — KBD_I2C_INT_L (2 3)
TP0934 A TP-P6 — KBD_I2C_SCL (2 3)
TP0935 A TP-P6 — PMU_RSLOC_RST_L (2 3)
TP0936 A TP-P6 — KBD_ID1 (2 3)
TP0937 A TP-P6 — PP3V3_G3H_INTPR (3)
TP0938 A TP-P6 — PP3V3_G3S_INTPR (3)
TP0939 A TP-P6
TP0940 A TP-P6
TP0941 A TP-P6 — PP1V8_IOXP (2 3 4)
TP0942 A TP-P6 — PP3V3_G3S_KYBD (2 3)
TP0943 A TP-P6
TP0944 A TP-P6

DESENSE

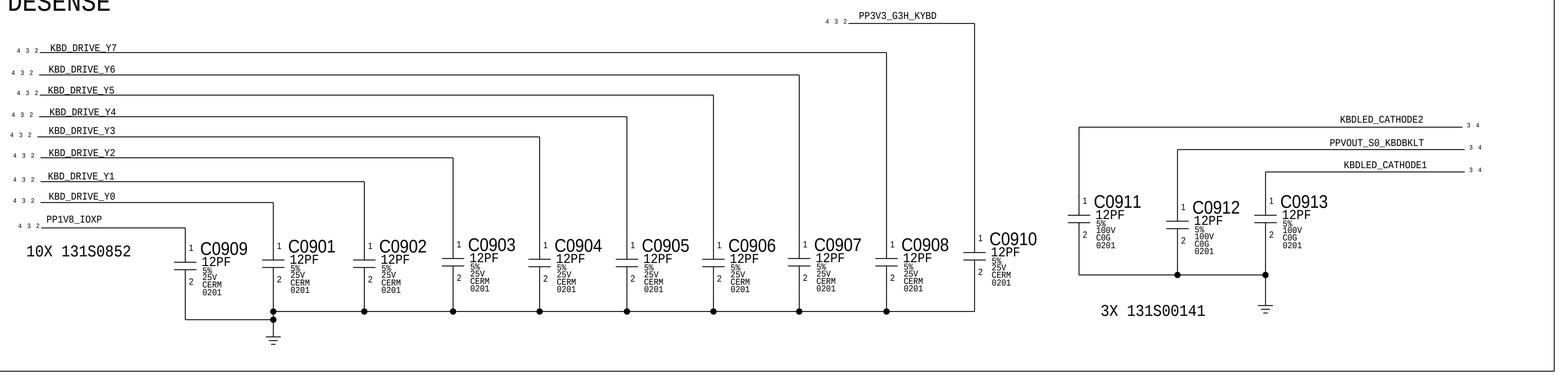

PAGE TITLE
CONSTRAINS & BOM VARIANTS

HISTORY

REV	EDITED BY	DATE	DESCRIPTION
0.1	THAI LA	04/15/2019	FIRST DRAFT, COPY FROM J140 P1 (PET KBD VERSION)
0.2		04/22/2019	CLEAN UP FOR PET MEMBRANE KBD
0.3		04/24/2019	CLEAN UP TEST POINTS & ESD DIODES
0.4		05/15/2019	ADD R0290 CONNECT ADDRESS PIN OF U0202 TO 1.8V
0.5		05/15/2019	CHANGE XCODE BAK TO X1777
0.6		05/16/2019	CHANGE PP0201-PP0203 TO TP0201-TP0203
0.7		05/28/2019	ADD TP0204 TO NET LED_EN
0.8		05/29/2019	ADD TP0205 & TP0942
0.9		05/31/2019	ADD TP0206 & TP0207
0.10			
0.11		05/31/2019	ADD TP0943 & TP0944
		06/03/2019	ADD 353S00879 AS ALTERNATE FOR 353S00754, U0205 1.8V LDO
1.0		06/04/2019	RELEASE FOR OK2FAB

PAGE TITLE

HISTORY